PS QWIK FLUSH™ QUICK STEP CONTROL DIAGRAMS

Non-Operating
Figure A

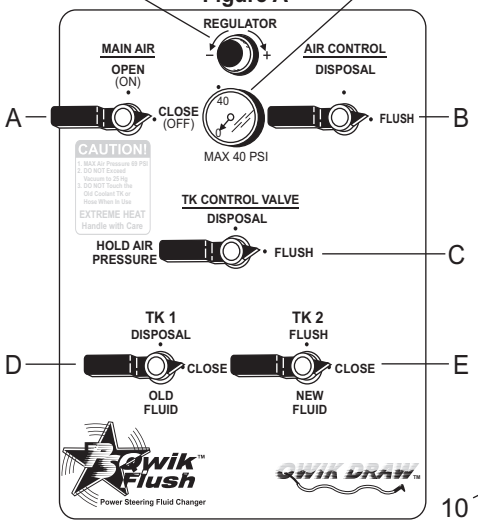

Filling TK2 With New Fluid
Figure B (Step 1)

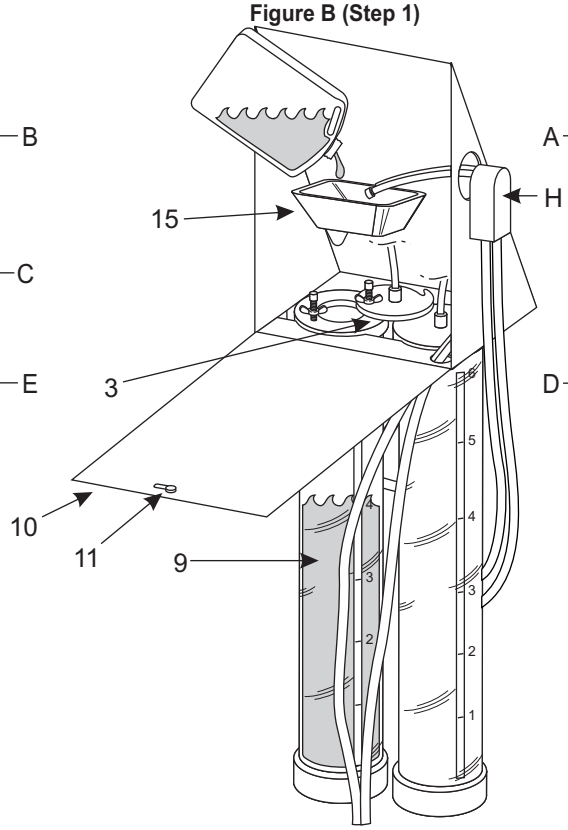

Preparation
Figure C (Step 2)

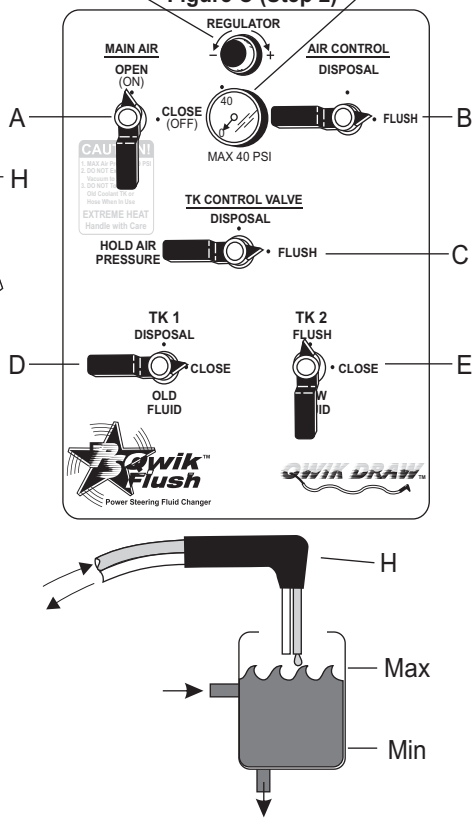

Vacuum Old Fluid from PS
Figure D (Step 3)

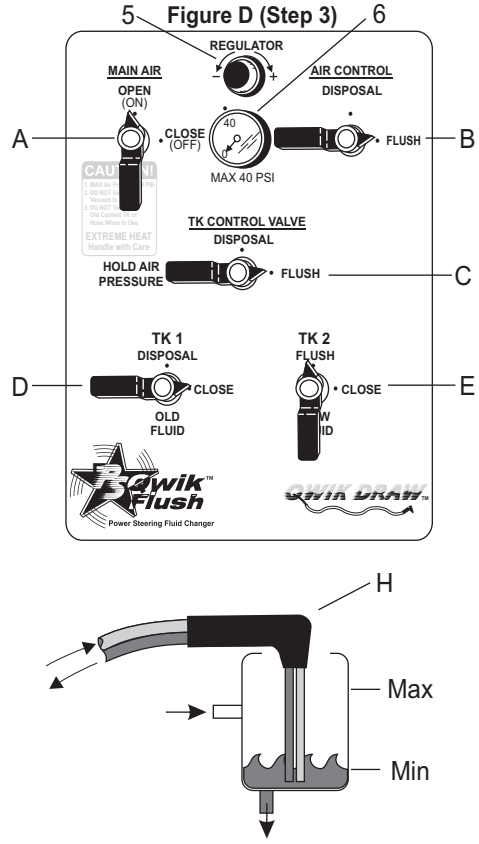

Release New Fluid to PS
Figure E (Step 4)

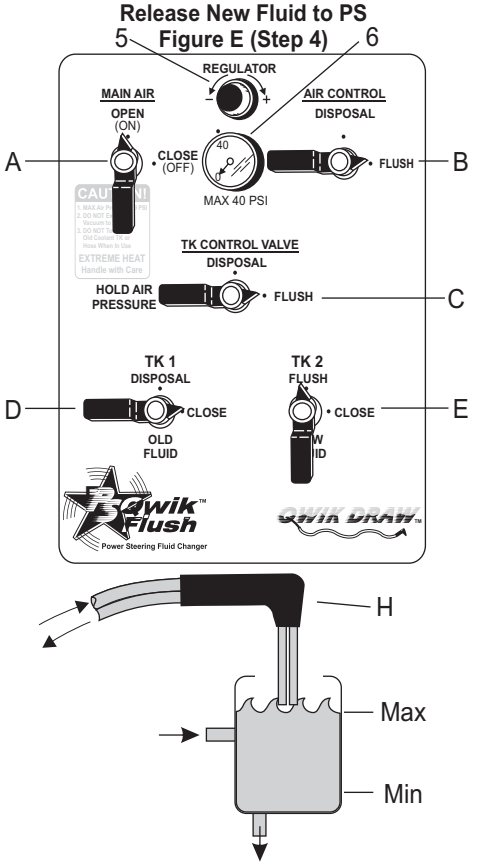
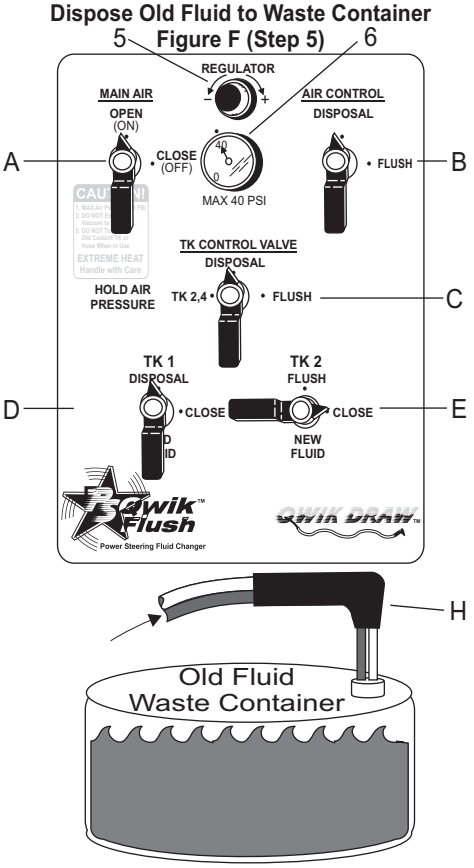
Dispose Old Fluid to Waste Container
Figure F (Step 5)