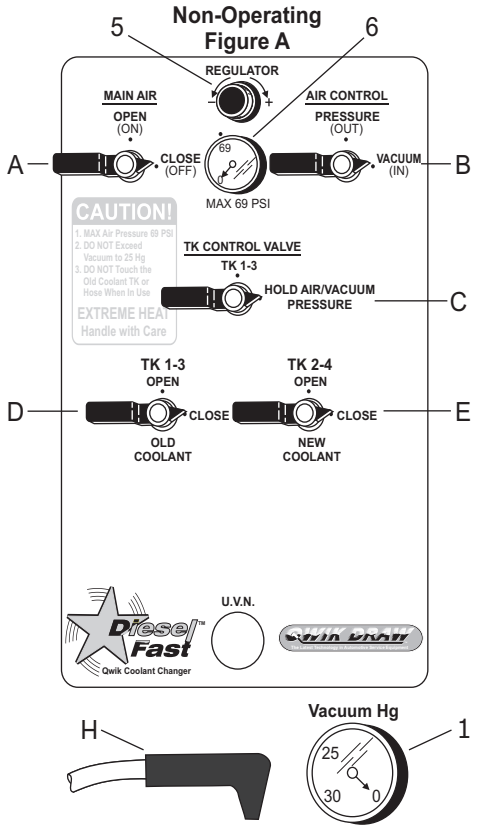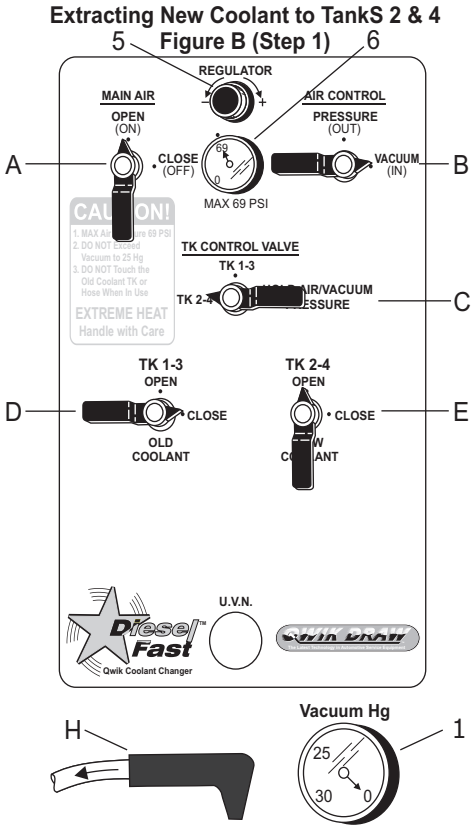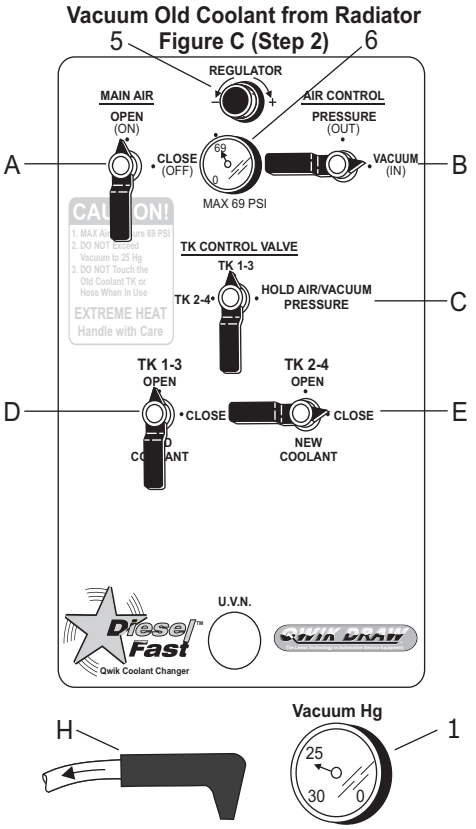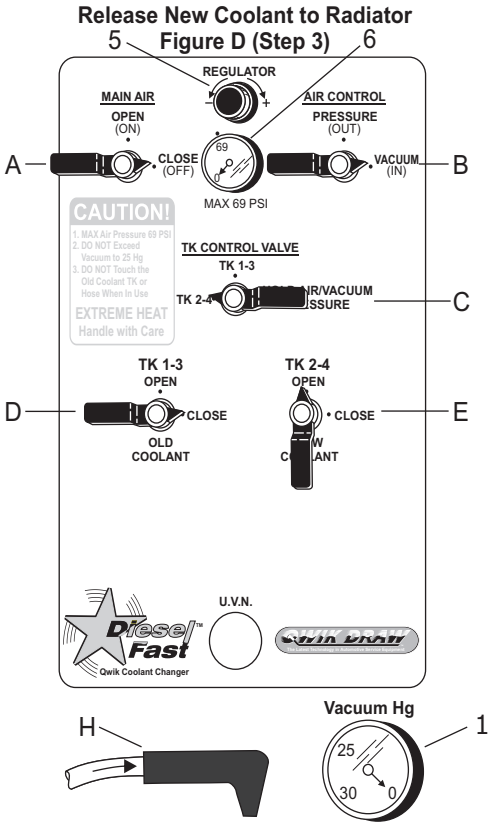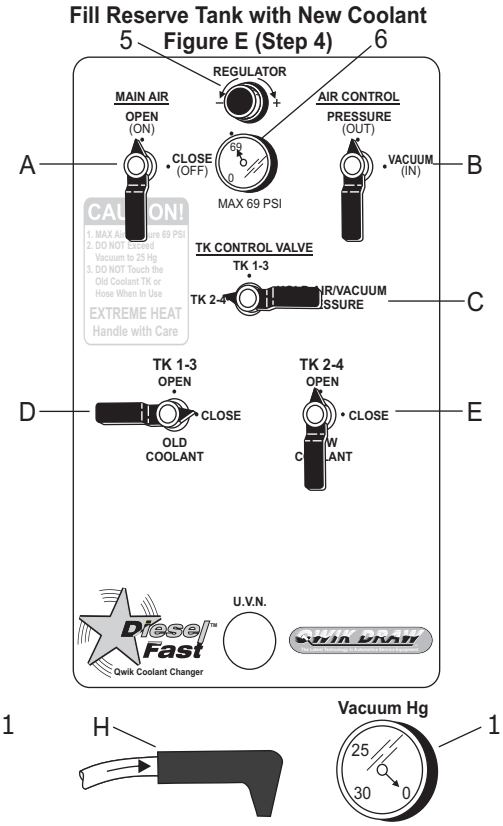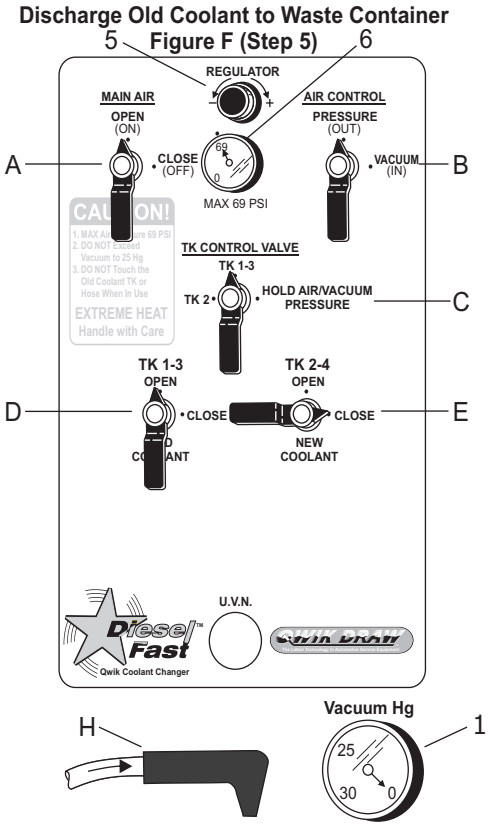# DIESEL FAST™ QUICK STEP CONTROL DIAGRAM